AXAIR REFRIGERATION LIMITED

Controller 971
Technical Information

eliwell

IDPlus 971 devices are controllers with 2 relay outputs, 2 temperature sensors (regulation and evaporator), a multifunctional Digital/Temperature input and a digital input.

IDPlus 971 User Interface

IDPlus 971

The relay output can be used to control:

- compressor
- defrost heating elements
- evaporator fans
- AUX output
- temperature alarm
- Standby

The second probe can be used to control the defrost cycle and the evaporator fans.

The Digital inputs (D.I.1 and D.I.2) can be used for:

- Energy saving
- Defrost activation
- AUX management
- door switch
- Standby
- external alarm
- Deep Cooling
- pressure switch
- HACCP alarms

KEYS

UP Press and release Scroll menu items Increases values Press for at least 5 sec Activates the Manual Defrost function	**STANDBY (ESC)** Press and release Returns to the previous menu level Confirms parameter value Press for at least 5 sec Activates the Standby function (when outside the menus)
DOWN Press and release Scroll menu items Decrease values Press for at least 5 sec Function can be configured by the user	**SET (ENTER)** Press and release Displays alarms (if active) Opens Machine Status menu Press for at least 5 sec Opens Programming menu Confirm commands

LEDs

Reduced SET / Economy LED Flashing: economy Setpoint active Quick flashing: access to level2 parameters Off: otherwise	Alarm LED Permanently on: alarm active Flashing: alarm acknowledged Off: otherwise
Compressor LED Permanently on: compressor active Flashing: a delay, a protection or a locked start-up Off: otherwise	Defrost LED Permanently on: defrost active Flashing: manual or D.I. activation Off: otherwise
Fans LED Permanently on: fans active Off: otherwise	Aux LED Permanently on: Aux output active Flashing manual or D.I. activation of Deep Cooling
°C LED Permanently on: °C setting (dro =0) Off: otherwise	°F LED Permanently on: °F setting (dro =1) Off: otherwise

* To activate the LOC function:
- enter the "Basic Commands" menu by pressing the key set
- press keys ⏻ and ⌃ within 2 seconds .

If the LOC function is Active and you try to enter the "Programming" menu, the text LOC appears. If this happens, the parameters are still displayed but cannot be edited. To disable the keypad lock, repeat the aforementioned procedure.

* When switched on, the device performs a Lamp Test, the display and LEDs will flash for several seconds to check that they all function correctly.

www.axair-refrigeration.co.uk
01782 618 444
sales@axair-refrigeration.co.uk

AXAIR REFRIGERATION LIMITED

Controller 971
Technical Information

eliwell

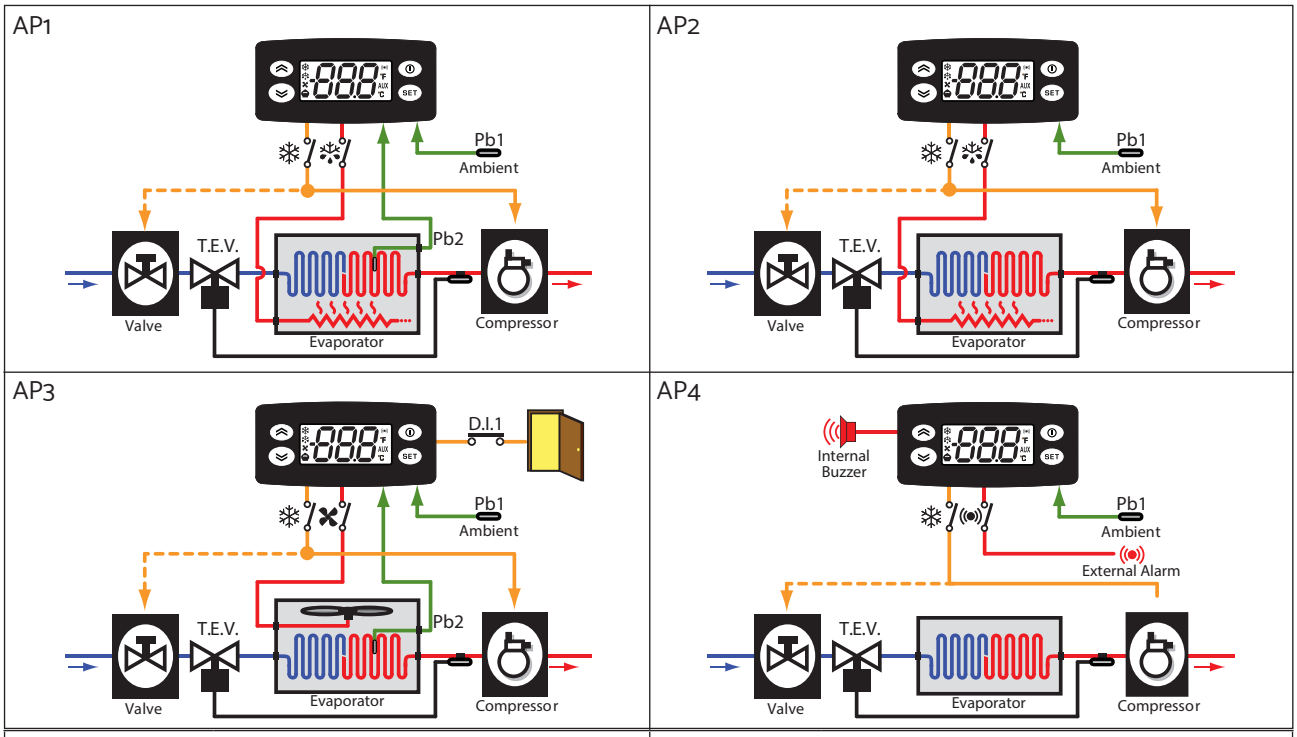

Ambient	= Ambient	Valve	= Valve
Evaporator	= Evaporator	Compressor	= Compressor
Internal Buzzer	= Internal Buzzer	T.E.V.	= Thermostatic Expansion Valve
External Alarm	= External Alarm		

TABLE OF 'INSTALLER' MENU PARAMETERS (IDPlus 971)

PAR.	DESCRIPTION	RANGE	AP1	AP2	AP3	AP4	M.U.
Set	Temperature control Setpoint.	LSE ... HSE	0,0	0,0	0,0	0,0	°C/°F
	COMPRESSOR ("CP" folder)						
Dif	differential. Compressor relay activation differential.	0,1...30,0	2,0	2,0	2,0	2,0	°C/°F
Hse	Higher Set. Maximum value that can be assigned to the Setpoint.	LSE...302	99,0	99,0	99,0	99,0	°C/°F
Lse	Lower Set. Minimum value that can be assigned to the Setpoint.	-58.0...HSE	-50,0	-50,0	-50,0	-50,0	°C/°F
Osp	Temperature value to be added to the Setpoint if reduced set enabled (Economy function).	-30,0...30,0	3,0	3,0	0,0	3,0	°C/°F
Hc	Control mode.C (0) = Cold, H (1) = Hot.	C/H	C	C	C	C	flag
Ont	Controller on time for faulty probe. If Ont = 1 and OFt = 0 the compressor remains on, if Ont =1 and OFt >0 it runs in duty cycle mode.	0 ... 250	0	0	0	0	min
Oft	Controller off time for faulty probe. If OFt = 1 and Ont = 0, the controller remains off, if OFt = 1 and Ont >0, it operates in duty cycle mode.	0 ... 250	1	1	1	1	min
Don	Compressor relay activation delay after request	0 ... 250	0	0	0	0	secs
Dof	Delay after switching off and subsequent activation	0 ... 250	0	0	0	0	min
Dbi	Delay between two consecutive compressor activations	0 ... 250	0	0	0	0	min
Odo (!)	Delay in activating outputs after the instrument is switched on or after a power failure.0= not active.	0 ... 250	0	0	0	0	min
Dcs	Deep Cooling cycle Setpoint.	-58,0...302	0,0	0,0	0,0	0,0	°C/°F
Tdc	Deep Cooling cycle duration.	0 ... 255	0	0	0	0	min
Dcc	Defrost activation delay after a Deep Cooling cycle.	0 ... 255	0	0	0	0	min
	DEFROST ("dEF" folder)						
Dty	Type of defrost. 0= electrical defrost,1 = reverse cycle defrost, 2 = defrost independent of compressor.	0/1/2	0	0	0	0	num
Dit	Interval between the start of two consecutive defrost cycles.	0 ... 250	6	6	6	6	hours

www.axair-refrigeration.co.uk
01782 618 444
sales@axair-refrigeration.co.uk

AXAIR REFRIGERATION LIMITED

Controller 971 Technical Information

eliwell

PAR.	DESCRIPTION	RANGE	AP1	AP2	AP3	AP4	M.U.
Dct	Selection of count mode for the defrost interval. 0 = compressor running time, 1 = appliance running time, 2 = A defrost cycle is run at each compressor stop.	0/1/2	1	1	1	1	num
Doh	Delay for start of first defrost after request.	0 ... 59	0	0	0	0	min
Det	Defrost timeout, determines the maximum defrost duration.	1 ... 250	30	30	30	30	min
Dst	Defrost end temperature - determined by the evaporator probe.	-50,0...150	8,0	50,0	8,0	50,0	°C/°F
Dpo	Determines whether the instrument must enter defrost mode at start-up. n (0) = no,y (1) = yes.	n/y	n	n	n	n	flag
	FANS ("FAn" folder)						
Fst	Fans stop temperature.	-58,0...302	50,0	50,0	50,0	50,0	°C/°F
Fad	Fan activation differential.	1,0 ... 50,0	2,0	2,0	2,0	2,0	°C/°F
Fdt	Fan activation delay after a defrost cycle.	0 ... 250	0	0	0	0	min
Dt	Coil drainage time.	0 ... 250	0	0	0	0	min
Dfd	Allows evaporator fan exclusion to be selected or not selected during defrosting. y (0) = yes (fans excluded), n (1) = no (it depends on FCO parameter).	n/y	y	y	y	y	flag
Fco	Selects or deselects fan deactivation at compressor OFF. 0 = fans off, 1 = fans active,2= duty cycle.	0/1/2	0	0	0	0	num
Fon	Fans ON time in day duty cycle.	0 ... 99	0	0	0	0	min
Fof	Fans OFF time in day duty cycle.	0 ... 99	0	0	0	0	min
Fnn	Fans ON time in night duty cycle.	0 ... 99	0	0	0	0	min
Fnf	Fans OFF time in night duty cycle.	0 ... 99	0	0	0	0	min
Esf	Night mode activation. n (0) = no,y (1) = yes.	n/y	n	n	n	n	flag
	ALARMS ("AL" folder)						
Att	Can be used to select absolute (Att=0) or relative (Att=1) values for HAL and LAL parameters.	0/1	0	0	0	0	num
Afd	Alarm differential.	1,0 ... 50,0	2,0	2,0	2,0	2,0	°C/°F
Hal	Maximum temperature alarm.	LAL...302	50,0	50,0	50,0	50,0	°C/°F
Lal	Minimum temperature alarm.	-58.0...HAL	-50,0	-50,0	-50,0	-50,0	°C/°F
Pao	Alarm exclusion time after re-activation following a power failure.	0 ... 10	0	0	0	0	hours
Dao	Temperature alarm exclusion time after defrost.	0 ... 999	0	0	0	0	min

PAR.	DESCRIPTION	RANGE	AP1	AP2	AP3	AP4	M.U.
Oao	Alarm signalling delay after disabling of digital input.	0 ... 10	0	0	0	0	hours
Tdo	Delay in door open alarm activation.	0 ... 250	0	0	0	0	min
Tao	Time delay for temperature alarm indication.	0 ... 250	0	0	0	0	min
Dat	Alarm signalling end of defrost due to timeout. n (0) = no,y (1) = yes.	n/y	n	n	n	n	flag
Rlo	External alarm locks controllers. n (0) = does not lock, y (1) = locks.	n/y	n	n	n	n	flag
Sa3	Probe 3 alarm Setpoint.	-58,0...+302	0,0	0,0	0,0	0,0	°C/°F
Da3	Probe 3 alarm differential.	1,0 ... 50,0	1,0	1,0	1,0	1,0	°C/°F
	LIGHTS & DIGITAL INPUTS ("Lit" folder)						
Dod	Digital input for switching off utilities. 0=disabled, 1 =disables fans,2=disables the compressor, 3 =disables fans and compressor.	0/1/2/3	0	0	2	0	num
Dad	Activation delay for digital input.	0 ... 255	0	0	0	0	min
dCO	Compressor deactivation delay after door opened.	0 ... 255	1	1	1	1	min
	PRESSURE SWITCH ("PrE" folder)						
Pen	Number of errors allowed per maximum/minimum pressure switch input.	0 ... 15	0	0	0	0	num
Pei	Minimum/maximum pressure switch error count interval.	1 ... 99	1	1	1	1	min
Pet	Delay in activating compressor after pressure switch deactivation.	0 ... 255	0	0	0	0	min
	COMMUNICATION ("Add" folder)						
Pts	Communication protocol selection. t (0) = Televis, d (1) = Modbus.	t/d	t	t	t	t	flag
Dea	Index of the device inside the family (valid values from 0 to 14).	0 ... 14	0	0	0	0	num
Faa	Device family (valid values from 0 to 14).	0 ... 14	0	0	0	0	num
Pty	Modbus parity bit. n (0) = none, E (1) = even, o (2) = odd.	n/E/o	n	n	n	n	num
Stp	Modbus stop bit. 1b(0) = 1 bit, 2b (1) = 2 bit.	1b/2b	1b	1b	1b	1b	flag
	DISPLAY ("diS" folder)						
Loc	Basic commands modification lock. It is still possible to enter parameter programming mode and modify them. n (0) = no,y (1) = yes.	n/y	n	n	n	n	flag
Ps1	Password1: if PS1≠0 is the access key to User parameters.	0 ... 250	0	0	0	0	num
Ps2	Password2: if PS2≠0 is the access key to Installer parameters.	0 ... 250	15	15	15	15	num
Ndt	Display with decimal point. n (0) = no,y (1) = yes.	n/y	y	y	y	y	flag
Ca1	Calibration 1. Temperature value to be added to the Pb1 value.	-12,0...+12,0	0,0	0,0	0,0	0,0	°C/°F

www.axair-refrigeration.co.uk
01782 618 444
sales@axair-refrigeration.co.uk

PAR.	DESCRIPTION	RANGE	AP1	AP2	AP3	AP4	M.U.
Ca2	Calibration 2. Temperature value to be added to the Pb2 value.	-12,0...+12,0	0,0	0,0	0,0	0,0	°C/°F
Ca3	Calibration 3. Temperature value to be added to the Pb3 value.	-12,0...+12,0	0,0	0,0	0,0	0,0	°C/°F
Ddl	Display mode during defrost. 0= display the temperature recorded by Pb1, 1 = lock recorded value of Pb1 at defrost start, 2= display the "dEF" label.	0/1/2	0	0	0	0	num
Ldd	Timeout value for display unlock - dEF label.	0 ... 255	30	30	30	30	min
Dro	Select the unit of measurement used when displaying the temperature recorded by the probes. (0 = °C, 1 = °F). NOTE: switching between °C and °F or vice-versa DOES NOT modify the SEt, diF values, etc. (e.g. Setpoint=10°C becomes 10°F).	0/1	0	0	0	0	flag
Ddd	Selects the type of value to display. 0 = Setpoint, 1 = probe Pb1, 2 = probe Pb2, 3 = probe Pb3.	0/1/2/3	1	1	1	1	num
	HACCP ("HCP" folder)						
Shh	Maximum HACCP alarm signals threshold.	-55,0...150	0	0	0	0	°C/°F
Slh	Minimum HACCP alarm signals threshold.	-55,0...150	0	0	0	0	°C/°F
Dra	Minimum time spent in critical range for the event to be recorded. After this a HACCP alarm will be triggered and logged.	0 ... 99	0	0	0	0	min
Drh	HACCP alarm reset time after last reset.	0 ... 250	0	0	0	0	hours
H50	Enable HACCP and alarm relay functions. 0= HACCP alarms NOT enabled, 1 = HACCP alarms enabled and alarm relay NOT enabled, 2 = HACCP alarms enabled and alarm relay enabled.	0/1/2	0	0	0	0	num
H51	HACCP alarm exclusion time.	0 ... 250	0	0	0	0	min
	CONFIGURATION ("CnF" folder) ➡ If one or more parameters present in this forder are changed, the controller MUST be powered-off and than powered-on.						
H00 (!)	Probe type selection. 0 = PTC, 1 = NTC, 2 = PT1000.	0/1/2	1	1	1	1	num
H11	Configuration of digital input 1/polarity. 0= disabled, ±1 = defrost, ±2 = economy Setpoint, ±3= AUX, ±4 = door switch, ±5 = external alarm, ±6 = Standby, ±7 = pressure switch, ±8 = Deep Cooling, ±9 = disable HACCP alarm logging. NOTE• the "+" sign indicates that the input is active if the contact is closed. • the "-" sign indicates that the input is active if the contact is open.	-9 ... +9	0	0	4	0	num

PAR.	DESCRIPTION	RANGE	AP1	AP2	AP3	AP4	M.U.
H12	Configuration of digital input 2/polarity. Same as H11.	-9 ... +9	0	0	0	0	num
H21	Configurability of digital output 1 (❄). 0 = disabled, 1 = compressor, 2 = defrost, 3 = fans, 4 = alarm, 5 = AUX, 6 = Standby.	0 ... 6	1	1	1	1	num
H22	Configurability of digital output 2 (❄). Same as H21.	0 ... 6	2	2	3	4	num
H25	Enable/Disable buzzer. 0=Disabled, 4=Enabled, 1-2-3-5-6-7-8=not used.	0 ... 8	0	0	0	4	num
H31	Configurability of UP key. 0 = disabled, 1 = defrost, 2 = AUX, 3 = economy Setpoint, 4 = Standby, 5 = reset HACCP alarms, 6 = disable HACCP alarms, 7 = Deep Cooling.	0 ... 7	1	1	1	1	num
H32	Configurability of DOWN key. Same as H31.	0 ... 7	0	0	0	0	num
H42	Evaporator probe present. n (0) = not present, y (1) = present.	n/y	y	n	y	n	flag
H43	Probe 3 present. n (0) = not present, y (1) = present.	n/y	n	n	n	n	flag
Rel	Device version. Read-only parameter.	/	/	/	/	/	/
Tab	tAble of parameters. Reserved: read-only parameter.	/	/	/	/	/	/
	COPY CARD ("FPr" folder)						
UI	Programming parameter transfer from instrument to Copy Card .	/	/	/	/	/	/
Fr	Format Copy Card. Erase all data contained in the Copy Card. NOTE: If parameter "Fr" is used, the data entered will be permanently lost. This operation cannot be cancelled.	/	/	/	/	/	/
	FUNCTIONS ("FnC" folder)						
Rap	Reset pressure switch alarms.	/	/	/	/	/	/
Res	Reset HACCP alarms.	/	/	/	/	/	/

NOTE: If one or more parameters marked with (!) are modified, the controller MUST be switched off and then switched on again to ensure correct operation.