AXAIR REFRIGERATION LIMITED

Controller 961
Technical Information

eliwell

IDPlus 961 devices are controllers with 1 relay output, 1 temperature regulation sensor and 1 multifunctional Digital/Temperature imput. Temperature control and compressor start/stop, plus natural defrost on compressor stop. Heating function: the controller can also be used as a simple ON/OFF thermostat for heating applications.

IDPlus 961 User Interface

IDPlus 961

The Digital imput (D.I.) can be used for:

- -Energy saving
- -Defrost activation
- -Door Switch
- -Standby
- -External Alarm
- -Deep Cooling
- -Pressure Switch
- -HACCP alarms

KEYS

UP
Press and release
Scroll menu items
Increases values
Press for at least 5 sec
Activates the Manual Defrost function

STANDBY (ESC)
Press and release
Returns to the previous menu level
Confirms parameter value
Press for at least 5 sec
Activates the Standby function
(when outside the menus)

DOWN
Press and release
Scroll menu items
Decrease values
Press for at least 5 sec
Function can be configured by the user (par. H32)

SET (ENTER)
Press and release
Displays alarms (if active)
Opens Machine Status menu
Press for at least 5 sec
Opens Programming menu
Confirm commands

LEDs

REDUCED SET / ECONOMY LED

Flashing:	economy Setpoint active
Quick flashing:	access to level2 parameters
Off:	otherwise

ALARM LED

Permanently on:	alarm active
Flashing:	alarm acknowledged
Off:	otherwise

COMPRESSOR LED

Permanently on:	compressor active
Flashing:	a delay, a protection or a locked start-up
Off:	otherwise

DEFROST LED

Permanently on:	defrost active
Flashing:	manual or D.I. activation
Off:	otherwise

HEAT STATUS LED

Permanently on:	compressor in HEAT
Off:	otherwise

STATUS LED

Flashing	manual or D.I. activation Deep Cooling
Off:	otherwise

°C LED

Permanently on:	°C setting (dro = 0)
Off:	otherwise

°F LED

Permanently on:	°F setting (dro = 1)
Off:	otherwise

* To activate the LOC function:
- enter the "Basic Commands" menu by pressing set key
- press key and within 2 seconds.

If the LOC function is Active and you try to enter the "Programming" menu, the text LOC appears. If this happens, the parameters are still displayed but cannot be edited. To disable the keypad lock, repeat the aforementioned procedure.

* When switched on, the device performs a Lamp Test, the display and LEDs will flash for several seconds to check that they all function correctly.

www.axair-refrigeration.co.uk
01782 618 444
sales@axair-refrigeration.co.uk

AXAIR REFRIGERATION LIMITED

Controller 961
Technical Information

eliwell

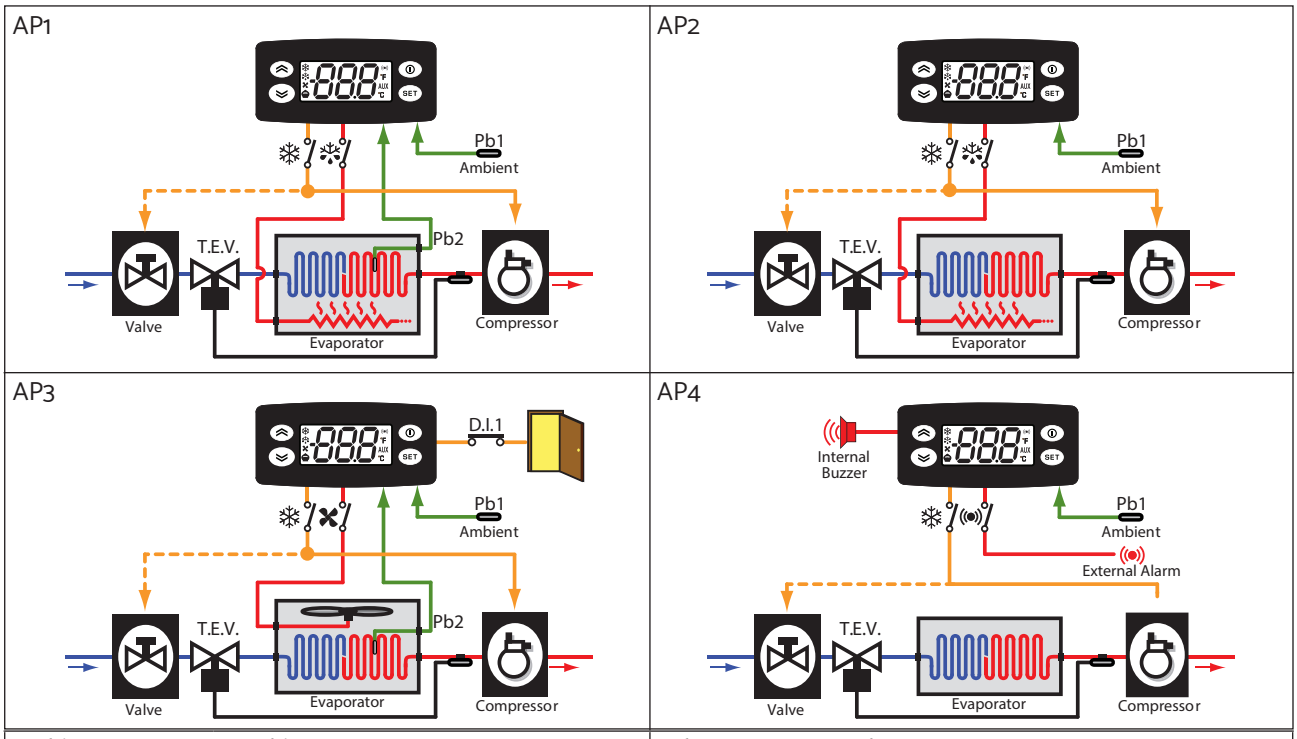

Ambient	= Ambient	Valve	= Valve
Evaporator	= Evaporator	Compressor	= Compressor
Internal Buzzer	= Internal Buzzer	T.E.V.	= Thermostatic Expansion Valve
External Alarm	= External Alarm		

TABLE OF 'USER' MENU PARAMETERS (IDPlus 961)

PAR.	DESCRIPTION	RANGE	AP1	AP2	AP3	AP4	M.U.
SET	Temperature control Setpoint	LSE ... HSE	0.0	0.0	0.0	-2.0	°C/°F
DIF	Compressor relay activation differential	0.1 ... 30.0	2.0	2.0	2.0	0.1	°C/°F
HSE	Maximum value that can be assigned to the Setpoint	LSE ... 302	99.0	140	140	5.0	°C/°F
LSE	Minimum value that can be assigned to the Setpoint	-58.0 ... HSE	-50.0	-55.0	-55.0	-10.0	°C/°F
DIT	Interval between the start of two consecutive defrost cycles	0 ... 250	6			8	hours
DET	Defrost timeout	1 ... 250	30			30	min
HAL	Maximum temperature alarm	LAL ... 150	50.0	150	150	50.0	°C/°F
LAL	Minimum temperature alarm	-50.0 ... HAL	-50.0	-50.0	-50.0	-50.0	°C/°F
SA3	Probe 3 alarm Setpoint	-50.0 ... 150				70.0	°C/°F
LOC	Basic commands modification lock	n/y	n	n	n	n	flag
PS1	PAssword 1 for access to QUICK menu parameters	0 ... 250	0	0	0	0	num
CA1	Calibration1. Value to be added to the value read by probe 1	-12.0 ... 12.0	0.0	0.0	0.0	0.0	°C/°F
CA3	Calibration3. Value to be added to the value read by probe 3	-12.0 ... 12.0				0.0	°C/°F
DDL	Display mode during defrost	0/1/2	0			0	num
LDD	Display lock disabling timeout. 0 = function disabled	0 ... 255	30			30	min
H43	Probe 3present	n/y				y	flag
REL	firmware release. Reserved: read-only parameter	/	/	/	/	/	/
TAB	tAble of parameters. Reserved: read-only parameter	/	/	/	/	/	/

www.axair-refrigeration.co.uk
01782 618 444
sales@axair-refrigeration.co.uk

AXAIR REFRIGERATION LIMITED

Controller 961
Technical Information

eliwell

TABLE OF 'INSTALLER' MENU PARAMETERS (IDPlus 961)

PAR.	DESCRIPTION	RANGE	AP1	AP2	AP3	AP4	M.U.
SEt	Temperature control Setpoint.	LSE ... HSE	0.0	0.0	0.0	-2.0	°C/°F
	COMPRESSOR ("CP" folder)						
diF	diFferential. Compressor relay activation differential.	0,1...30,0	2.0	2.0	2.0	0.1	°C/°F
HSE	Higher SEt. Maximum value that can be assigned to the Setpoint.	LSE...302	99.0	140	140	5.0	°C/°F
LSE	Lower SEt. Minimum value that can be assigned to the Setpoint.	-58.0...HSE	-50.0	-55.0	-55.0	-10.0	°C/°F
OSP	Temperature value to be added to the Setpoint if reduced set enabled (Economy function).	-30.0...30.0	3.0	3.0	0.0	0.0	°C/°F
Hc	Control mode.C(0) = Cold,H (1) = Hot.	C/H	C	C	H	C	flag
Ont	Controller on time for faulty probe. if Ont = 1 and OFt= 0, the compressor remains on, if Ont =1 and OFt >0 it runs in duty cycle mode.	0 ... 250	0	0	0	0	min
OFt	Controller off time for faulty probe. if OFt = 1 and Ont = 0, the controller remains off; if OFt = 1 and Ont > 0, it operates in duty cycle mode.	0 ... 250	1	1	1	1	min
dOn	Compressor relay activation delay after request.	0 ... 250	0	0	0	0	secs
dOF	Delay after switching off and subsequent activation.	0 ... 250	0	0	0	0	min
dbi	Delay between two consecutive compressor activations.	0 ... 250	0	0	0	0	min
OdO (!)	Delay in activating outputs after the instrument is switched on or after a power failure.0 = not active.	0 ... 250	0	0	0	0	min
dcS	Deep Cooling cycle Setpoint.	-58.0...302	0.0	0.0	0.0	0.0	°C/°F
tdc	Deep Cooling cycle duration.	0 ... 255	0	0	0	0	min
dcc	Defrost activation delay after a Deep Cooling cycle.	0 ... 255	0	0	0	0	min
	DEFROST ("dEF" folder)						
dit	Interval between the start of two consecutive defrost cycles.	0 ... 250	6	0	0	8	hours
dCt	Selection of count mode for the defrost interval. 0 = compressor running time, 1 = appliance running time, 2 = A defrost cycle is run at each compressor stop.	0/1/2	1	1	1	1	num

PAR.	DESCRIPTION	RANGE	AP1	AP2	AP3	AP4	M.U.
DOH	Delay for start of first defrost after request.	0 ... 59	0	0	0	0	min
DET	Defrost timeout, determines the maximum defrost duration.	1 ... 250	30	1	1	30	min
DPO	Determines whether the instrument must enter defrost mode at start-up. n (0) = no,y (1) = yes.	n/y	n	n	n	n	flag
	ALARMS ("AL" folder)						
ATT	Can be used to select absolute (Att=0) or relative (Att=1) values for HAL and LAL parameters.	0/1	0	0	0	0	num
AFD	Alarm differential.	1.0 ... 50.0	2.0	2.0	2.0	2.0	°C/°F
HAL	Maximum temperature alarm.	LAL...302	50.0	150	150	50.0	°C/°F
LAL	Minimum temperature alarm.	-58.0...HAL	-50.0	-50.0	-50.0	-50.0	°C/°F
PAO	Alarm exclusion time after re-activation following a power failure.	0 ... 10	0	0	0	0	hours
DAO	Temperature alarm exclusion time after defrost.	0 ... 999	0	0	0	0	min
OAO	Alarm signalling delay after disabling of digital input.	0 ... 10	0	0	0	0	hours
TDO	Delay in door open alarm activation.	0 ... 250	0	0	0	0	min
TAO	Time delay for temperature alarm indication.	0 ... 250	0	0	0	0	min
RLO	An external alarm locks the controllers. n (0) = does not lock,(1) = locks.	n/y	n	n	n	n	flag
SA3	Probe 3 alarm Setpoint.	-58.0...302	0.0	0.0	0.0	70.0	°C/°F
DA3	Probe 3 alarm differential.	1.0 ... 50.0	1.0	1.0	1.0	10.0	°C/°F
	LIGHTS & DIGITAL INPUTS ("Lit" folder)						
DOD	Digital input for switching off utilities. 0 = disabled, 1 = disables fans, 2 = disables the compressor,3 = disables fans and compressor.	0/1/2/3	0	0	0	0	num
DAD	Activation delay for digital input.	0 ... 255	0	0	0	0	min
DCO	Compressor deactivation delay after door opened.	0 ... 255	1	1	1	1	min
	PRESSURE SWITCH ("PrE" folder)						
PEN	Number of errors allowed per maximum/minimum pressure switch input.	0 ... 15	0	0	0	0	num
PEI	Minimum/maximum pressure switch error count interval.	1 ... 99	1	1	1	1	min
PET	Delay in activating compressor after pressure switch deactivation.	0 ... 255	0	0	0	0	min

AXAIR REFRIGERATION LIMITED

Controller 961
Technical Information

eliwell

PAR.	DESCRIPTION	RANGE	AP1	AP2	AP3	AP4	M.U.
	COMMUNICATION ("Add" folder)						
PTS	Communication protocol selection.t (0) = Televis, d (1) = Modbus.	t/d	t	t	t	t	flag
DEA	Index of the device inside the family (valid values from 0 to 14).	0 ... 14	0	0	0	0	num
FAA	Device family (valid values from 0 to 14).	0 ... 14	0	0	0	0	num
PTY	Modbus parity bit.n (0) = none, E (1) = even, o (2) = odd.	n/E/o	n	n	n	n	num
STP	Modbus stop bit. 1b(0) = 1 bit, 2b (1) = 2 bit.	1b/2b	1b	1b	1b	1b	flag
	DISPLAY ('diS' folder)						
LOC	Basic commands modification lock. It is still possible to enter parameter programming mode and modify them. n (0) = no, y (1) = yes.	n/y	n	n	n	n	flag
PS1	PAssword1: if PS1≠0 is the access key to "User" parameters.	0 ... 250	0	0	0	0	num
PS2	PAssword2: if PS2≠0 is the access key to "Installer" parameters.	0 ... 250	15	15	15	15	num
NDT	Display with decimal point.n (0) = no,y (1) = yes.	n/y	y	y	y	y	flag
CA1	Calibration 1. Temperature value to be added to the Pb1 value.	-12.0...12.0	0.0	0.0	0.0	0.0	°C/°F
CA3	Calibration 3. Temperature value to be added to the Pb3 value.	-12.0...12.0	0.0	0.0	0.0	0.0	°C/°F
ddL	Display mode during defrost. 0 = display temperature recorded by Pb1, 1 = lock recorded Pb1 value at the start of the defrost cycle, 2= display the "dEF" label.	0/1/2	0	0	0	0	num
Ldd	Timeout value for display unlock - dEF label	0 ... 255	30	30	30	30	min
dro	Select the unit of measurement used when displaying the temperature recorded by the probes. (0 = °C, 1 = °F). NOTE: switching between °C and °F or vice-versa DOES NOT modify the SEt, diF values, etc. (e.g. Setpoint=10°C becomes 10°F)	0/1	0	0	0	0	flag
ddd	Selects type of value to display. 0 = Setpoint, 1 = probe Pb1, 2 = probe Pb2, 3 = probe Pb3	0/1/2/3	1	1	1	1	num
	HACCP ("HCP" folder)						
SHH	Maximum HACCP alarm signals threshold.	-55.0...150	0.0	0.0	0.0	0.0	°C/°F
SLH	Minimum HACCP alarm signals threshold.	-55.0...150	0.0	0.0	0.0	0.0	°C/°F
drA	Minimum time spent in critical range for the event to be recorded. After this a HACCP alarm will be triggered and logged.	0 ... 99	0	0	0	0	min
drH	HACCP alarm reset time after last reset.	0 ... 250	0	0	0	0	hours

PAR.	DESCRIPTION	RANGE	AP1	AP2	AP3	AP4	M.U.
H50	Enable HACCP and alarm relay functions. 0 = HACCP alarms NOT enabled, 1 = HACCP alarms enabled and alarm relay NOT enabled, 2 = HACCP alarms enabled and alarm relay enabled.	0/1/2	0	0	0	0	num
H51	HACCP alarm exclusion time.	0 ... 250	0	0	0	0	min
	CONFIGURATION ("CnF" folder) ➡ If one or more parameters present in this forder are changed, the controller MUST be powered-off and than powered-on.						
H00 (!)	Probe type selection. 0 = PTC, 1 = NTC, 2 = PT1000.	0/1/2	1	1	1	1	num
H11	Configuration of digital input 1/polarity. 0 = disabled, ±1 = defrost, ±2 = economy Setpoint, ±3= AUX, ±4 = door switch, ±5= external alarm, ±6 = Standby, ±7 = pressure switch, ±8 = Deep Cooling, ±9 = disable HACCP alarm logging. NOTE: • the "+" sign indicates that the input is active if the contact is closed. • the "-" sign indicates that the input is active if the contact is open.	-9 ... +9	0	0	0	0	num
H21	(IDPlus 961 only). Configurability of digital output 1 (❄). 0 = disabled, 1 = compressor, 2= defrost, 3= fans, 4= alarm, 5= AUX, 6= Standby.	0 ... 6	1	1	1	1	num
H22	(IDPlus 902 only). Configurability of digital output 1 (❄). Same as H21.	0 ... 6	1	1	1	1	num
H31	Configurability of UP key. 0=disabled, 1 =defrost, 2=not used, 3=economy Setpoint, 4=Standby, 5=reset HACCP alarms, 6=disable HACCP alarms, 7=Deep Cooling.	0 ... 7	1	0	0	1	num
H32	Configurability of DOWN key. Same as H31.	0 ... 7	0	0	0	0	num
H43	Probe Pb3 present. n (0) = not present, y (1) = present.	n/y	n	n	n	y	flag
reL	Device version. Read-only parameter.	/	/	/	/	/	/
tAb	tAble of parameters. Reserved: read-only parameter.	/	/	/	/	/	/
	COPY CARD ("FPr" folder)						
UL	Programming parameter transfer from instrument to Copy Card.	/	/	/	/	/	/
Fr	Format Copy Card. Erase all data contained in the Copy Card. NOTE: if parameter "Fr" is used, the data entered will be permanently lost. This operation cannot be cancelled.	/	/	/	/	/	/
	FUNCTIONS ("FnC" folder)						
rAP	Reset pressure switch alarms	/	/	/	/	/	/
rES	Reset HACCP alarms	/	/	/	/	/	/

www.axair-refrigeration.co.uk
01782 618 444
sales@axair-refrigeration.co.uk